FACET™— Product Data Sheet

High Strength Roof Equipment Mounting System

Ideally suited for attachment of solar racking, electrical and mechanical equipment

U.S. Patent Numbers
9479110, 9647607

Product Description:

Facet is a high-strength cast aluminum roof equipment mounting solution that provides fast, simple installation and very high strength results. Facet works with all roofing systems, new and existing. For most solar racking applications, Facet allows installation without any roof excavation or attachment to roof structural members. Properly installed, Facet is watertight and can handle the most extreme wind conditions.

Features & Benefits:

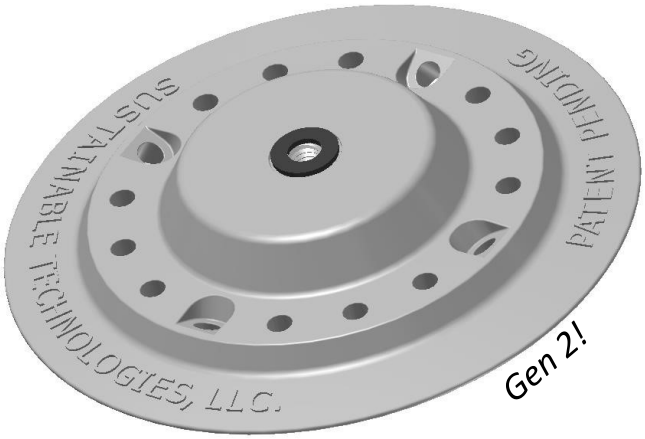

- **Fast installation**. Facet typically installs in 5 minutes, including membrane heat welding.
- **Layout flexibility**. Facet allows complete racking layout BEFORE making final attachment of Facet to the roof decking, greatly simplifying installation and dimension control.
- **Roof Protection**. Facet's design is so strong that chance of equipment movement after installation is extremely low, substantially reducing risk of water penetration or roof damage.
- **Interoperability**. Facet employs a 3/8" bolt receiver, allowing maximum equipment attachment flexibility. Installers can affix virtually any type of attachment bolt with the same thread pitch.
- **All roofs.** Facet is suitable for all roof types.

Performance:

Facet is a high-performance mounting system that provides substantial installation flexibility. With 12 vertical and 4 slanted mounting points, structural engineers can easily select the number and type of fasteners for each job. Whether your building in a low wind location or hurricane alley, Facet is the best choice!

Sustainable technologies™

www.sustainabletechnologiesllc.com

916.824.3008

Todd Lindstrom
916-240-2808
tlindstrom@enable-energy.com

Eric Hafter
916-826-2060
ehafter@enable-energy.com

Jack Patton
916-206-2920
jpatton@enable-energy.com

FACET™— Product Data Sheet

High Strength Roof Equipment Mounting System

U.S. Patent Numbers
9479110, 9647607

Ideally suited for attachment of solar racking, electrical and mechanical equipment

History:

Facet has been deployed at over 10MW of solar installations in the US, Europe and Pacific Islands. A 5MW New Jersey installation weathered both Irene and Sandy with ZERO failures or issues. Facet is suitable even in the Pacific Islands, with 195 mph design specification.

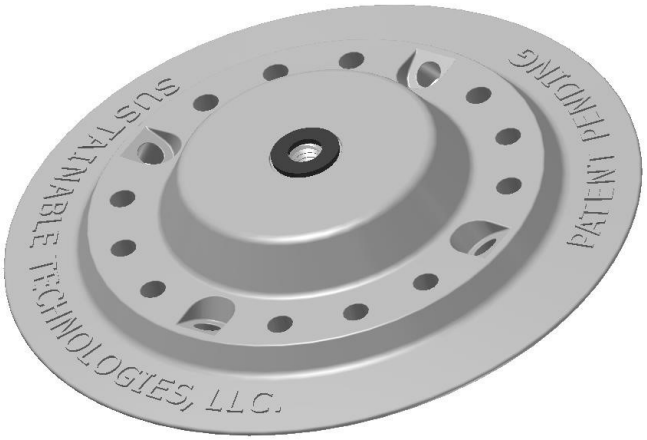

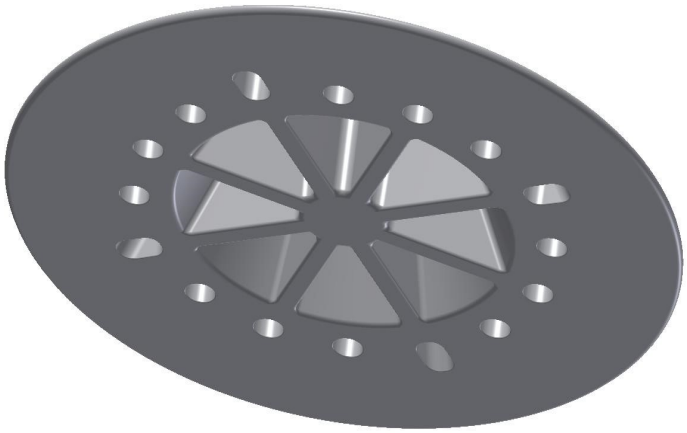

Installation: Facet typically installs for solar PV in 4-6 minutes with the following steps:

1. Clean roof surface of dirt and debris
2. Place Facet loosely onto the roof, where it will provide a stable base for racking installation
3. Remove double sided sealing washer protective tape and place pre-cut roof membrane cover over Facet
4. Attach racking (and even modules), Facets will 'find' their natural location
5. Install fasteners, number and type specified by your structural engineer
6. Facet allows installation up to 16 fasteners, allowing maximum flexibility and strength options
7. Heat-weld roof membrane cover to roof

**Facets are shipped with or without roof membrane Installers have the option to purchase a mated TPO or PVC flashing or can make their own to match your existing roof product*

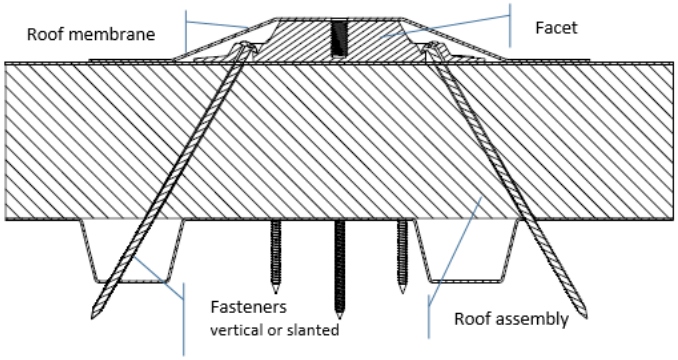

Test	Result
Uplift Resistance	**10,474 lbs.**
Shear Resistance	**6,167 lbs.**

Certified by PZSE, Structural Engineers
Available for download from
https://sustainabletechnologiesllc.com/

Todd Lindstrom
916-240-2808
tlindstrom@enable-energy.com

Eric Hafter
916-826-2060
ehafter@enable-energy.com

Jack Patton
916-206-2920
jpatton@enable-energy.com